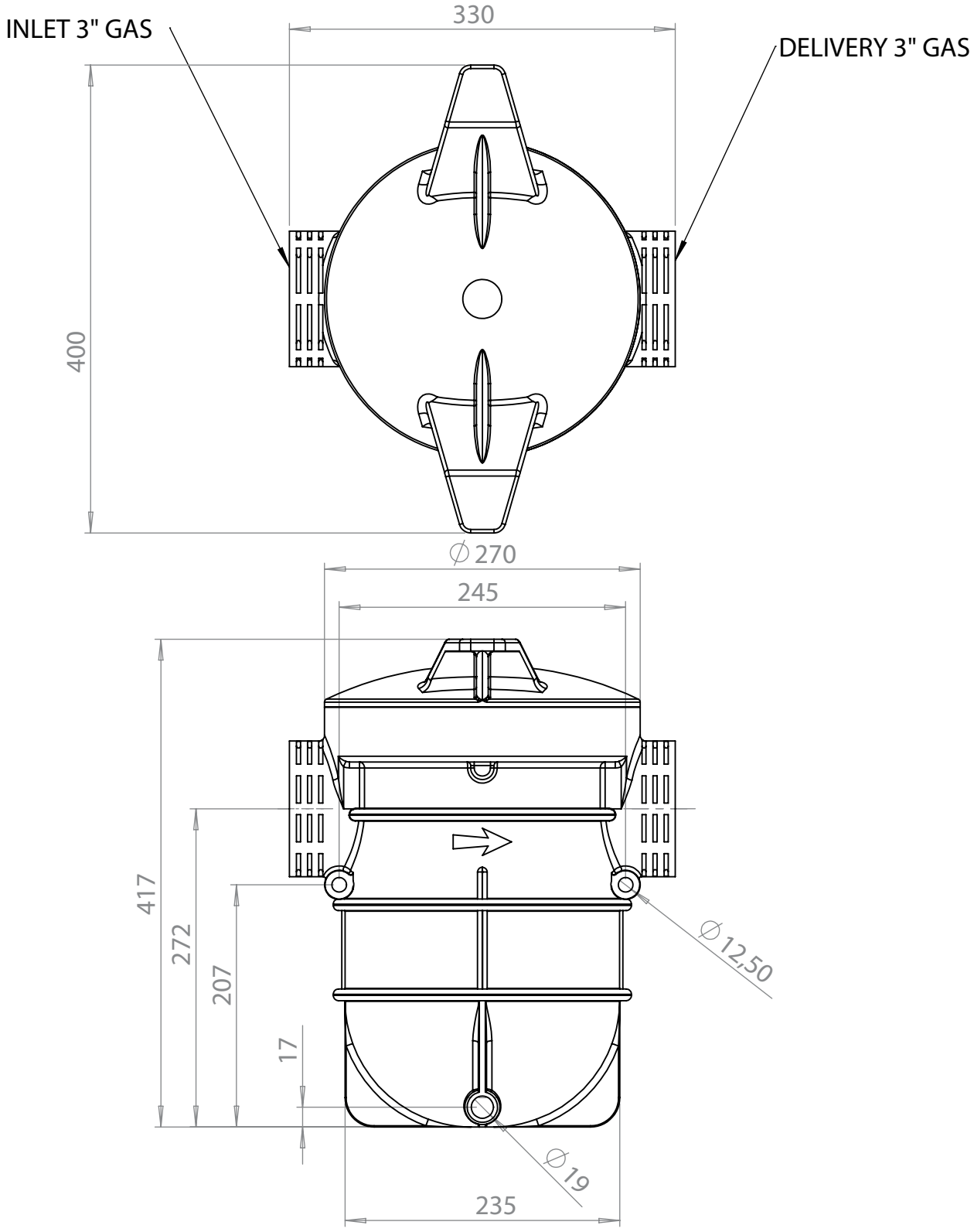
INLET 3" GAS
330
DELIVERY 3" GAS
400
∅270
245
417
272
207
17
∅12,50
∅19
235